CYW920829M2IPA2
INFINEON CYW20829 M.2 BLE RADIO MODULE

CONTENTS

PAGE	DESCRIPTION
01	Title Page
02	Block Diagram
03	Baseband
04	Radio
05	Interface to Baseboard
06	Revision History

Drawing Numbers

PCBA	121-90793-01
PCB	600-90793-01
FAB DRW	610-90793-01
ASSY DRW	620-90793-01
SCH	630-90793-01

Legal Disclaimer :
The information given in this document shall in no event be regarded as a guarantee of conditions or characteristics. With respect to any examples or hints given herein, any typical values stated herein and/or any information regarding the application of the device, Infineon Technologies hereby disclaims any and all warranties and liabilities of any kind, including without limitation, warranties of non-infringement of intellectual property rights of any third party.

SCH Title : CYW920829M2IPA2				
Page Title: Title Page				
Size	Document Number	Drawn By	Approved By	Rev
A4	630-90793-01	MILI	CLEU	3.1
Date: Tuesday, January 16, 2024		Sheet 1 of 7		

Block Diagram

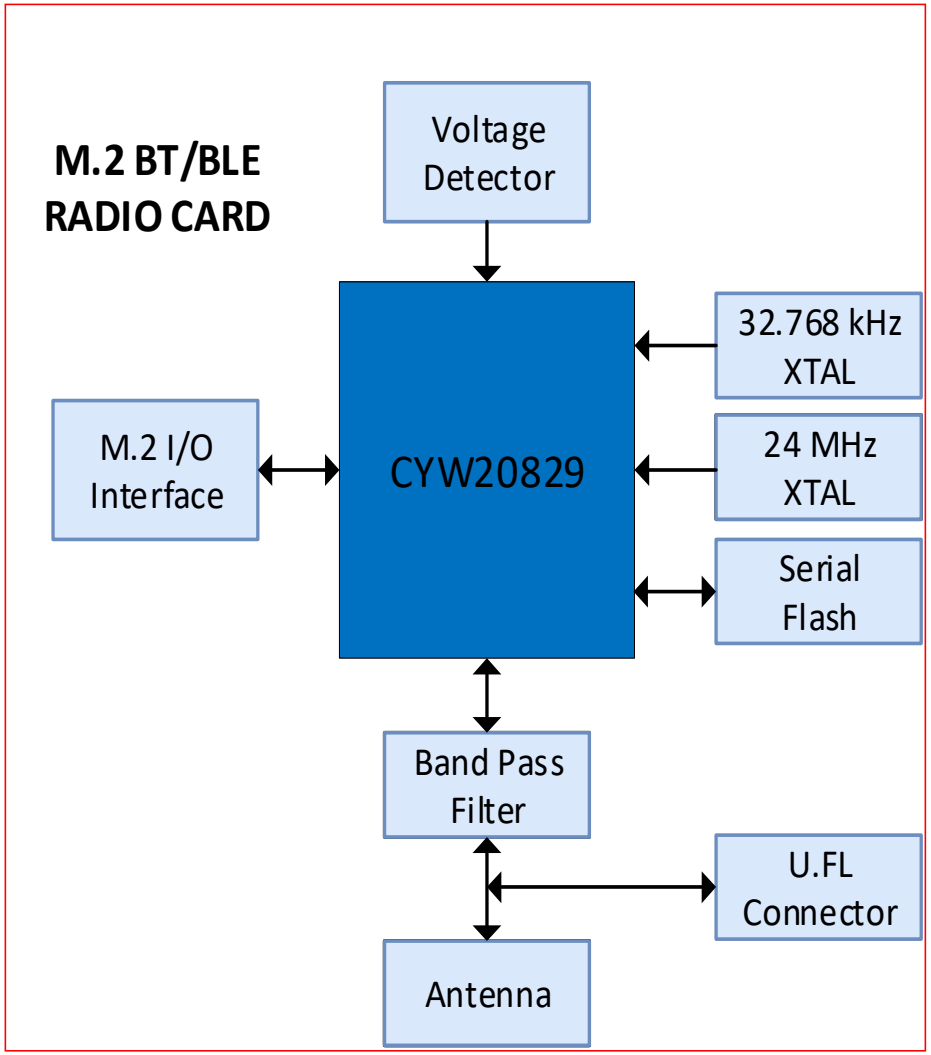

Legal Disclaimer :
The information given in this document shall in no event be regarded as a guarantee of conditions or characteristics. With respect to any examples or hints given herein, any typical values stated herein and/or any information regarding the application of the device, Infineon Technologies hereby disclaims any and all warranties and liabilities of any kind, including without limitation, warranties of non-infringement of intellectual property rights of any third party.

SCH Title : CYW920829M2IPA2				
Page Title: Block Diagram				
Size	Document Number	Drawn By	Approved By	Rev
A4	630-90793-01	MILI	CLEU	3.1
Date: Tuesday, January 16, 2024		Sheet 2 of 7		

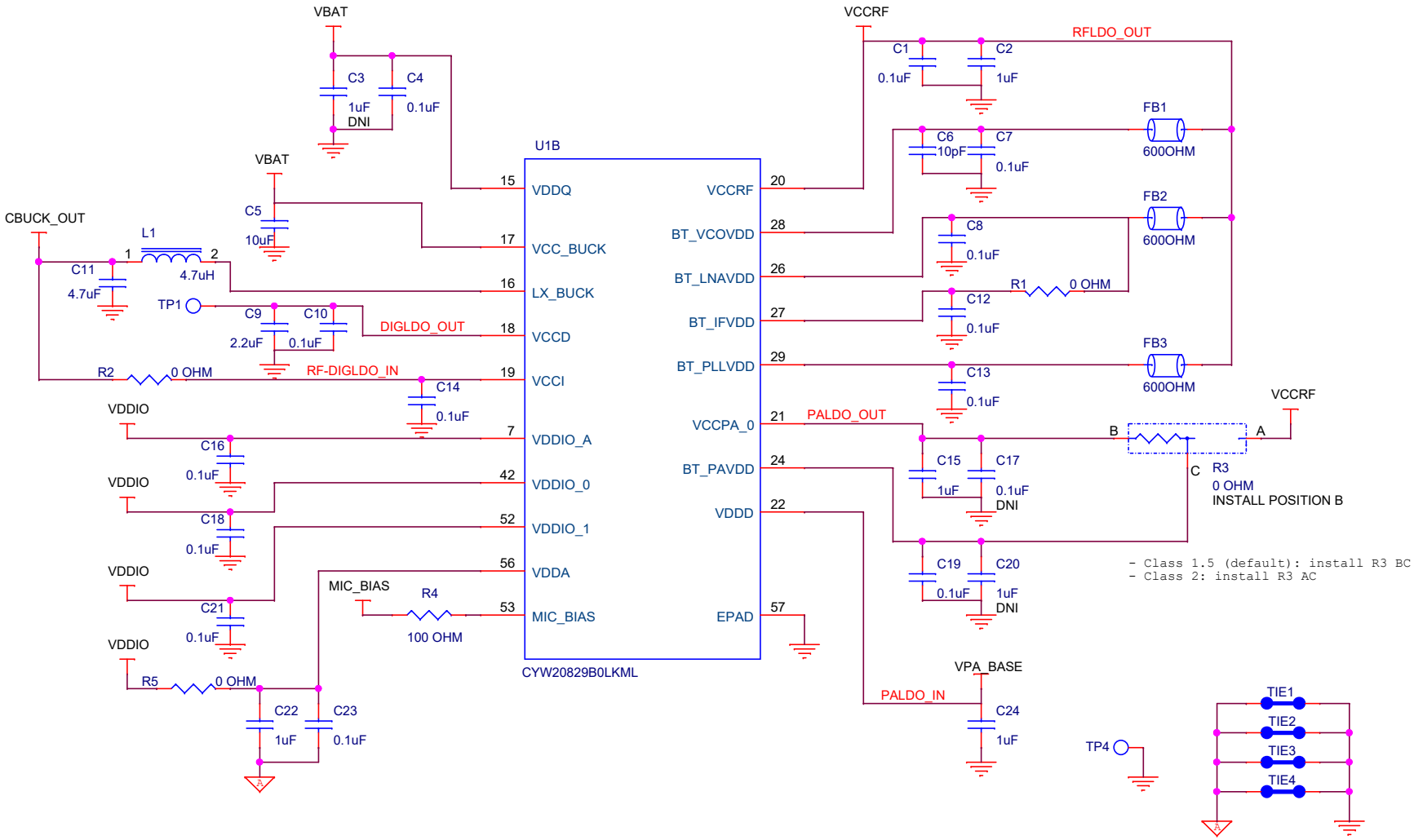

Legal Disclaimer :
The information given in this document shall in no event be regarded as a guarantee of conditions or characteristics. With respect to any examples or hints given herein, any typical values stated herein and/or any information regarding the application of the device, Infineon Technologies hereby disclaims any and all warranties and liabilities of any kind, including without limitation, warranties of non-infringement of intellectual property rights of any third party.

SCH Title : CYW920829M2IPA2				
Page Title: Power				
Size	Document Number	Drawn By	Approved By	Rev
A4	**630-90793-01**	**MILI**	**CLEU**	**3.1**
Date: Tuesday, January 16, 2024		Sheet **3** of **7**		

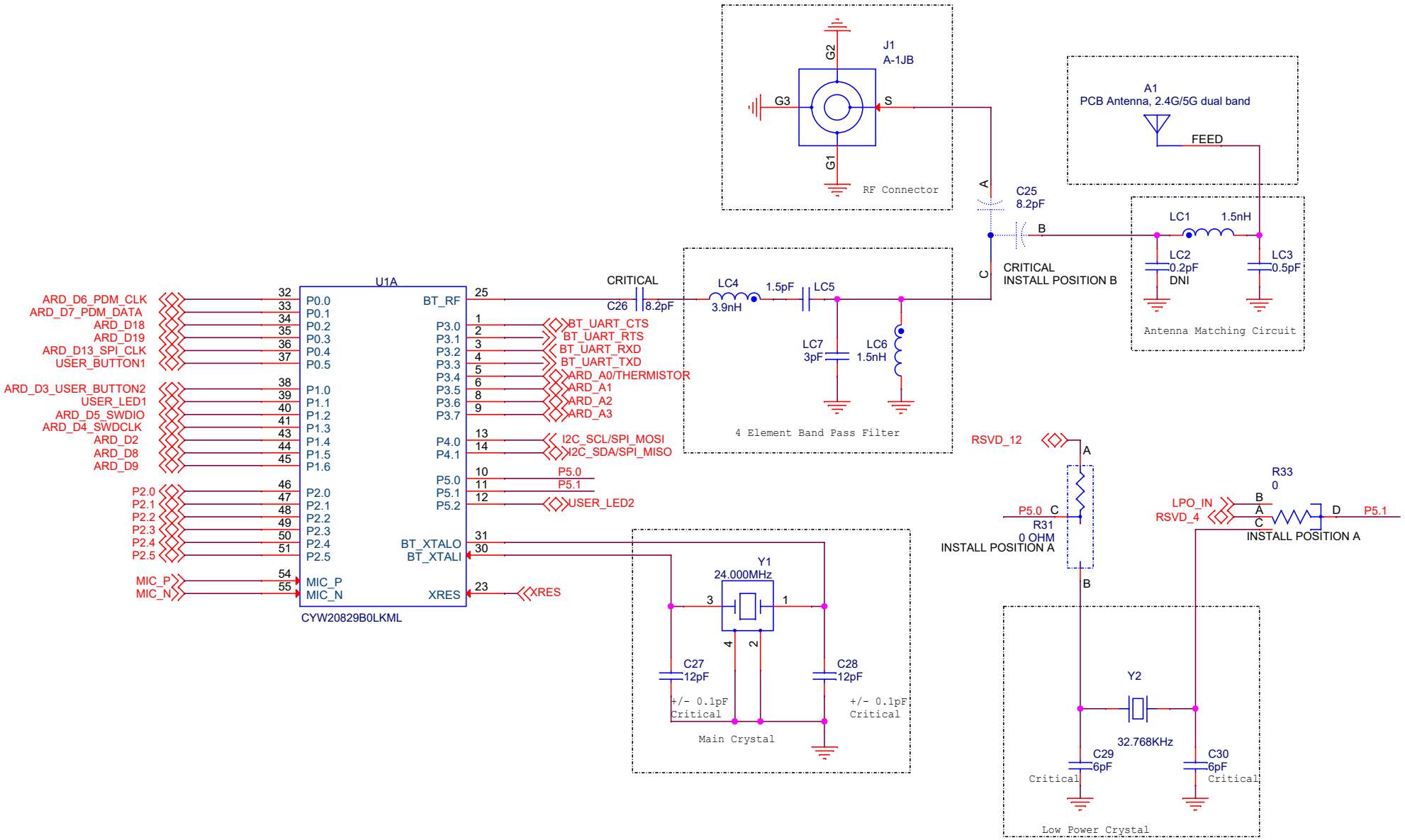

Legal Disclaimer :
The information given in this document shall in no event be regarded as a guarantee of conditions or characteristics. With respect to any examples or hints given herein, any typical values stated herein and/or any information regarding the application of the device, Infineon Technologies hereby disclaims any and all warranties and liabilities of any kind, including without limitation, warranties of non-infringement of intellectual property rights of any third party.

SCH Title : CYW920829M2IPA2				
Page Title: Radio & GPIO				
Size	Document Number	Drawn By	Approved By	Rev
A4	630-90793-01	MILI	CLEU	3.1
Date: Tuesday, January 16, 2024		Sheet 4 of 7		

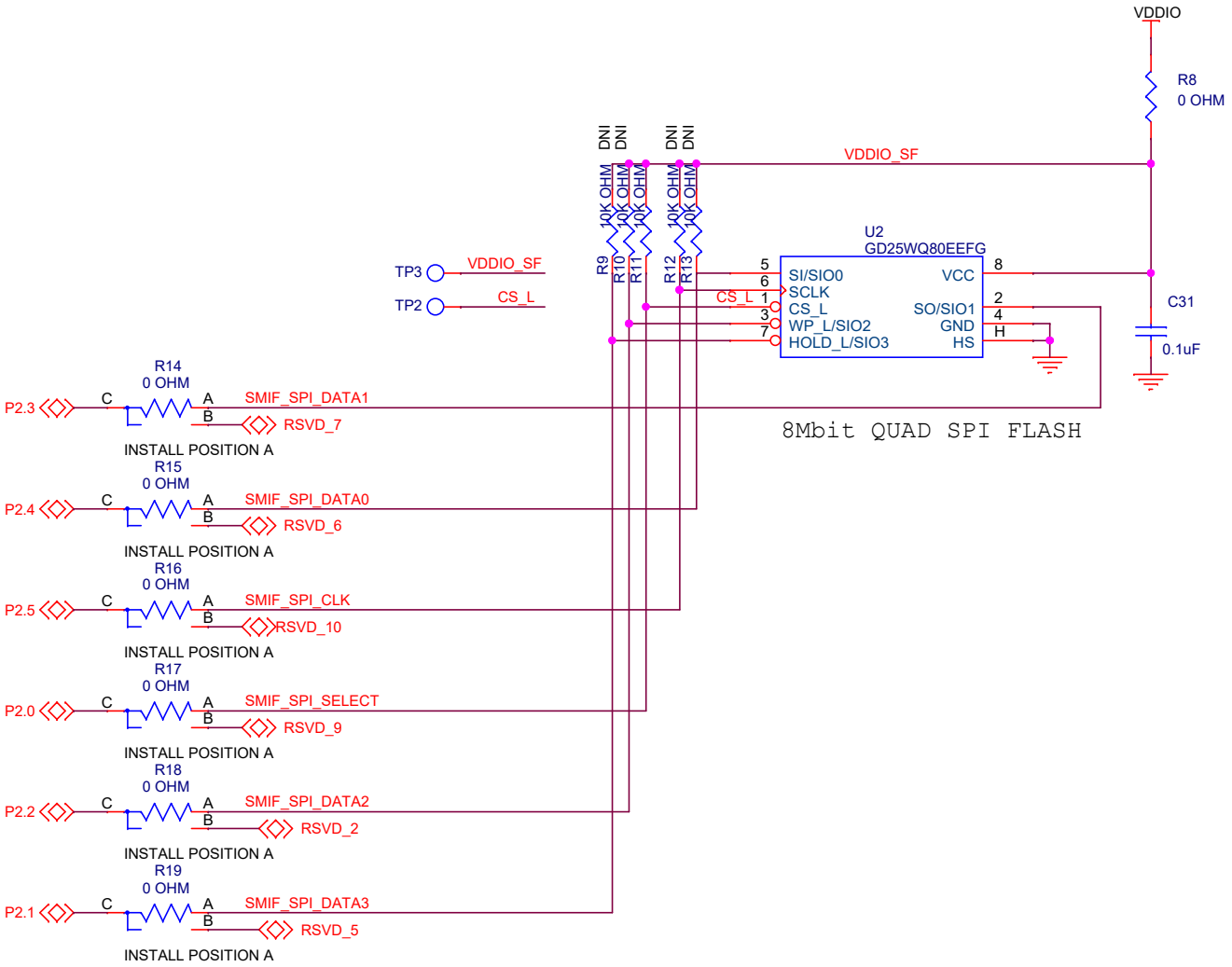

Legal Disclaimer :
The information given in this document shall in no event be regarded as a guarantee of conditions or characteristics. With respect to any examples or hints given herein, any typical values stated herein and/or any information regarding the application of the device, Infineon Technologies hereby disclaims any and all warranties and liabilities of any kind, including without limitation, warranties of non-infringement of intellectual property rights of any third party.

SCH Title : CYW920829M2IPA2				
Page Title: Serial Flash				
Size	Document Number	Drawn By	Approved By	Rev
A4	630-90793-01	MILI	CLEU	3.1
Date: Tuesday, January 16, 2024		Sheet 5 of 7		

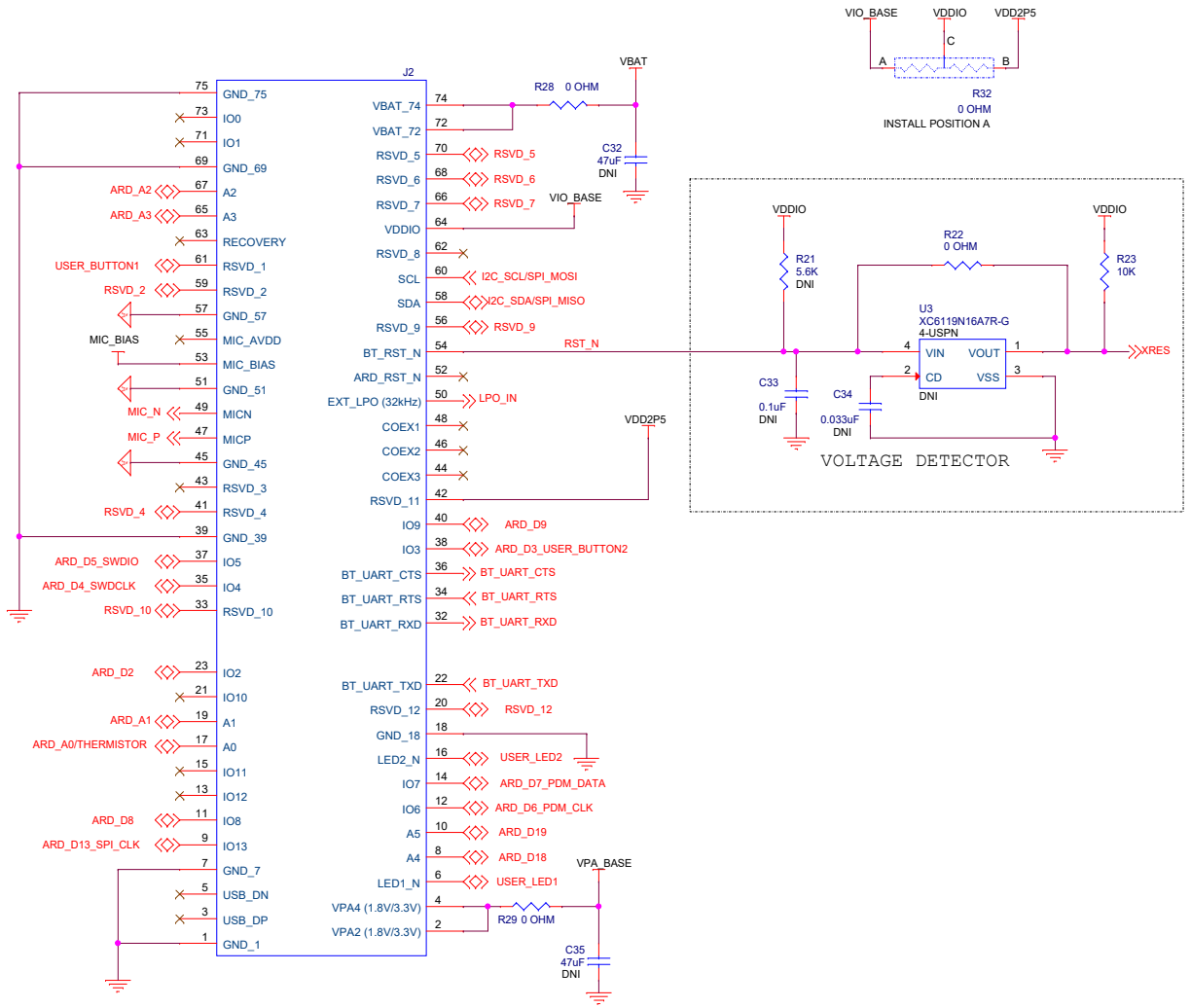

Legal Disclaimer :
The information given in this document shall in no event be regarded as a guarantee of conditions or characteristics. With respect to any examples or hints given herein, any typical values stated herein and/or any information regarding the application of the device, Infineon Technologies hereby disclaims any and all warranties and liabilities of any kind, including without limitation, warranties of non-infringement of intellectual property rights of any third party.

SCH Title : CYW920829M2IPA2				
Page Title: Interface to Baseboard				
Size	Document Number	Drawn By	Approved By	Rev
A3	630-90793-01	MILI	CLEU	3.1
Date: Tuesday, January 16, 2024			Sheet 6 of 7	

REVISION HISTORY

REV	DESCRIPTION OF CHANGE	Orig. of Change	DATE
1.0	Initial Release, based on CYW920829M2IPA1 Rev 2.0	MILI	8/16/2022
2.0	1) Updated U1 with B0 part 2) Switched SCL and SDA routing on M.2 interface 3) Added SMD TP to VCCD, CS_L, VDDIO, and GND 4) Updated R20, R28, and R29 to 0603 size	LIUJE	2/21/2023
2.1	Updated antenna matching components, LC1 to 3.9pF, LC3 to 0.5pF	MILI	04/21/2023
2.2	Populate C1, C7 and C14	MILI	04/28/2023
2.3	Updated antenna matching components, LC1 to 2.7pF, LC3 to 0.2pF	MILI	06/08/2023
2.4	Marked R12 and R13 as DNI under the DNI column. Also DNI'ed R6	MILI	06/20/2023
3.0	Swapped EXT_LPO to P5.1. CAN_FD Interface moved to RSVD_4 and RSVD_12. DNI'ed R9, R10, C21, C33, C34 and U3, installed R22, changed R23 to 10kOhm	MILI	08/04/2023
3.1	Updated antenna matching components for Rev04 baseboard, LC1 to 1.5nH, LC3 to 0.5pF	MILI	01/16/2024

Legal Disclaimer :
The information given in this document shall in no event be regarded as a guarantee of conditions or characteristics. With respect to any examples or hints given herein, any typical values stated herein and/or any information regarding the application of the device, Infineon Technologies hereby disclaims any and all warranties and liabilities of any kind, including without limitation, warranties of non-infringement of intellectual property rights of any third party.